Photodisruption in turbid tissue with 100-fs and 200-ps laser pulses

Nozomi Nishimura
Chris B. Schaffer
Nan Shen
André Brodeur
Joop Grevelink
Eric Mazur

APS Centennial Meeting
26 March1999

Introduction

focus ultrashort laser pulse on tissue

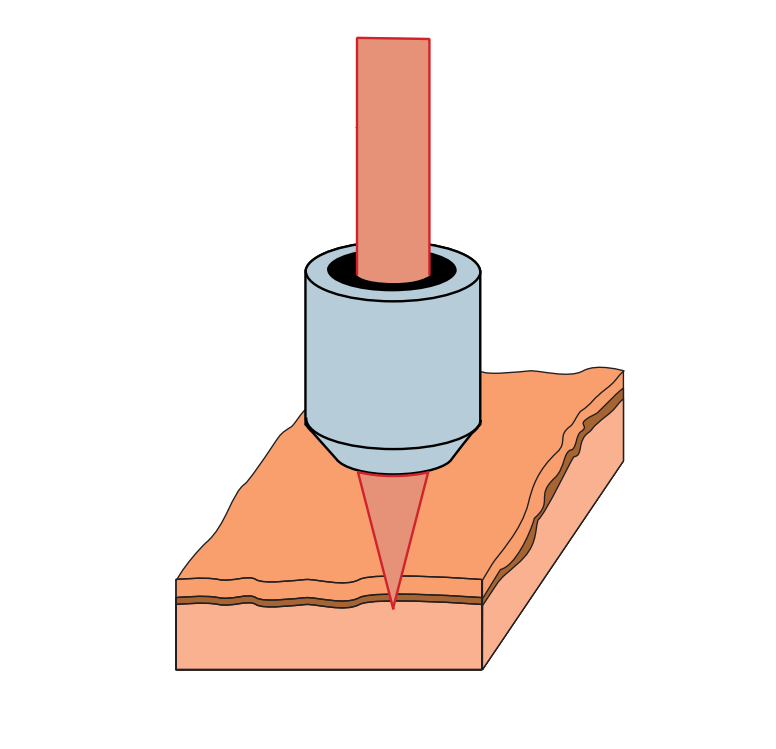

Introduction

high laser intensity at focus…

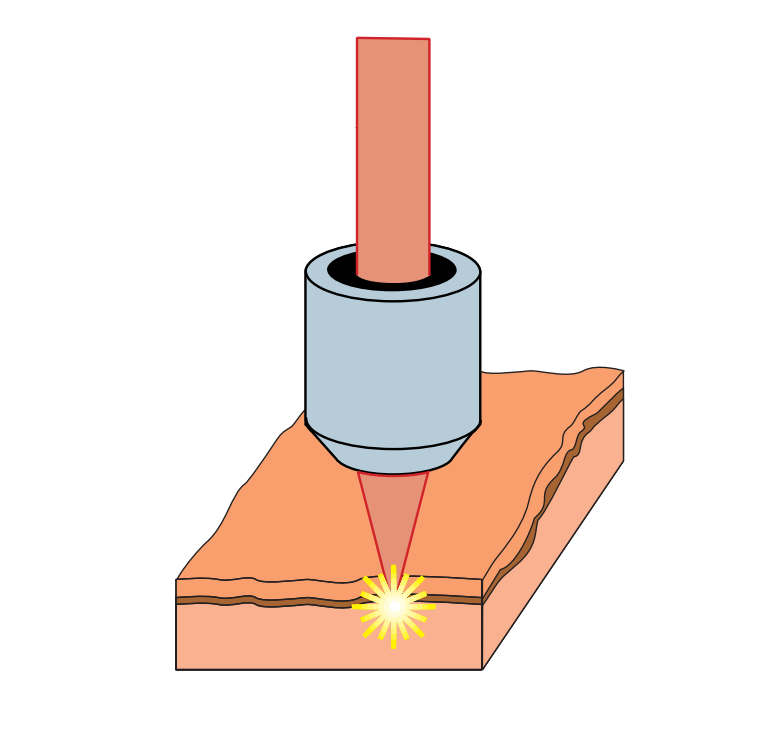

Introduction

… leaves microscopic damage

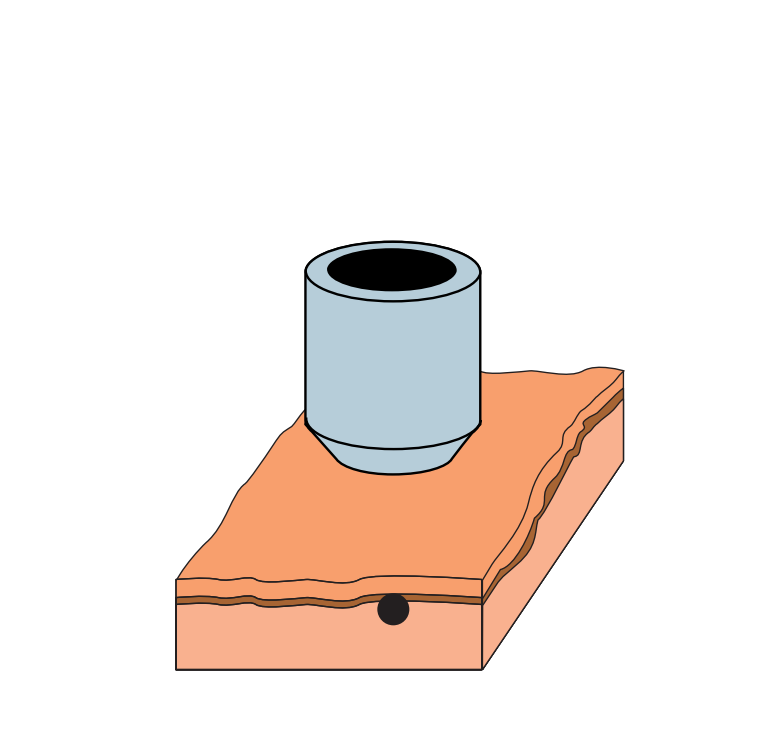

Outline

- **Dynamics of photodisruption**
- **Photodisruption in epidermis**
- **Deep photodisruption**

Dynamics of photodisruption

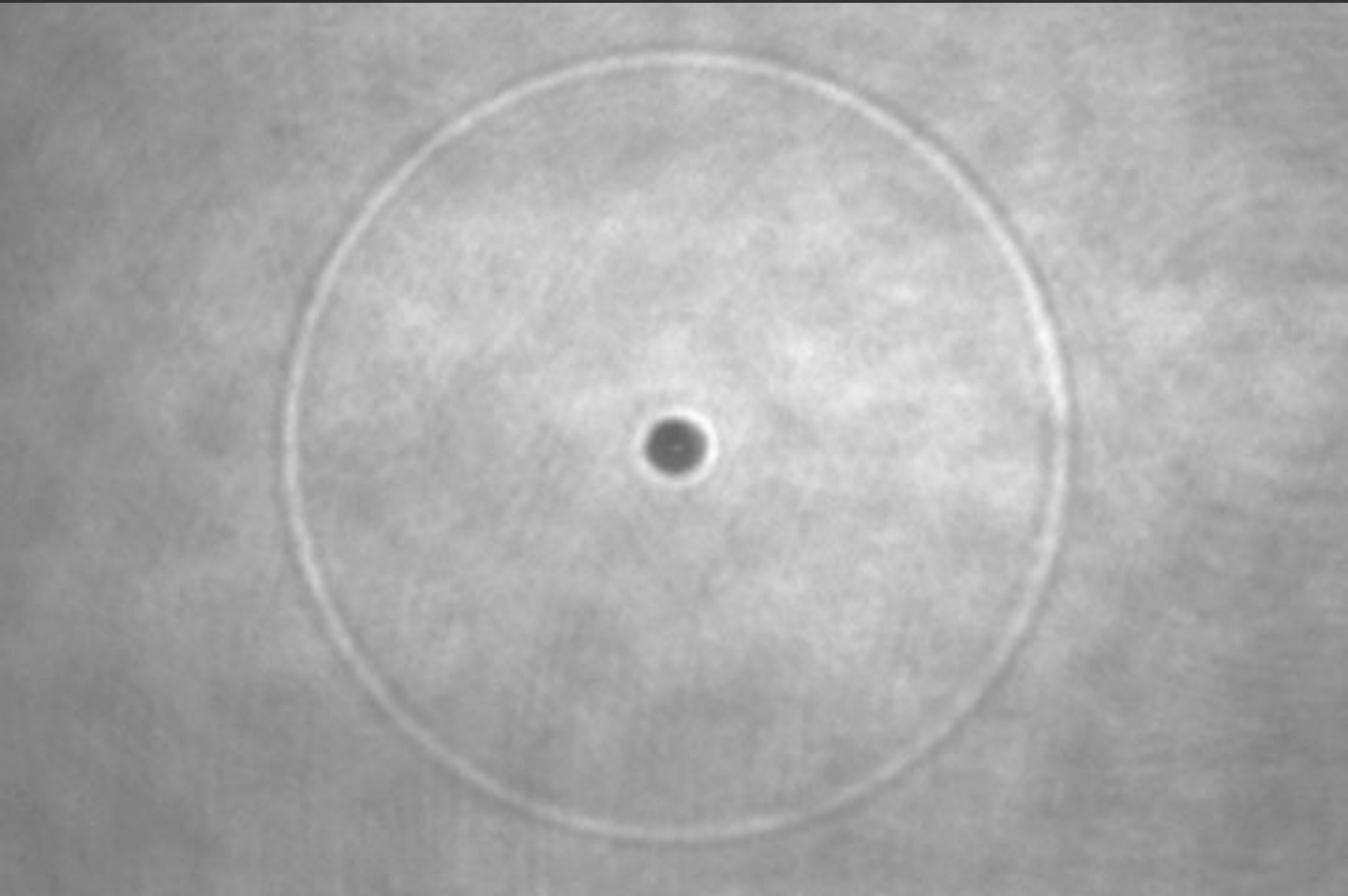

Dynamics of photodisruption

Dynamics of photodisruption

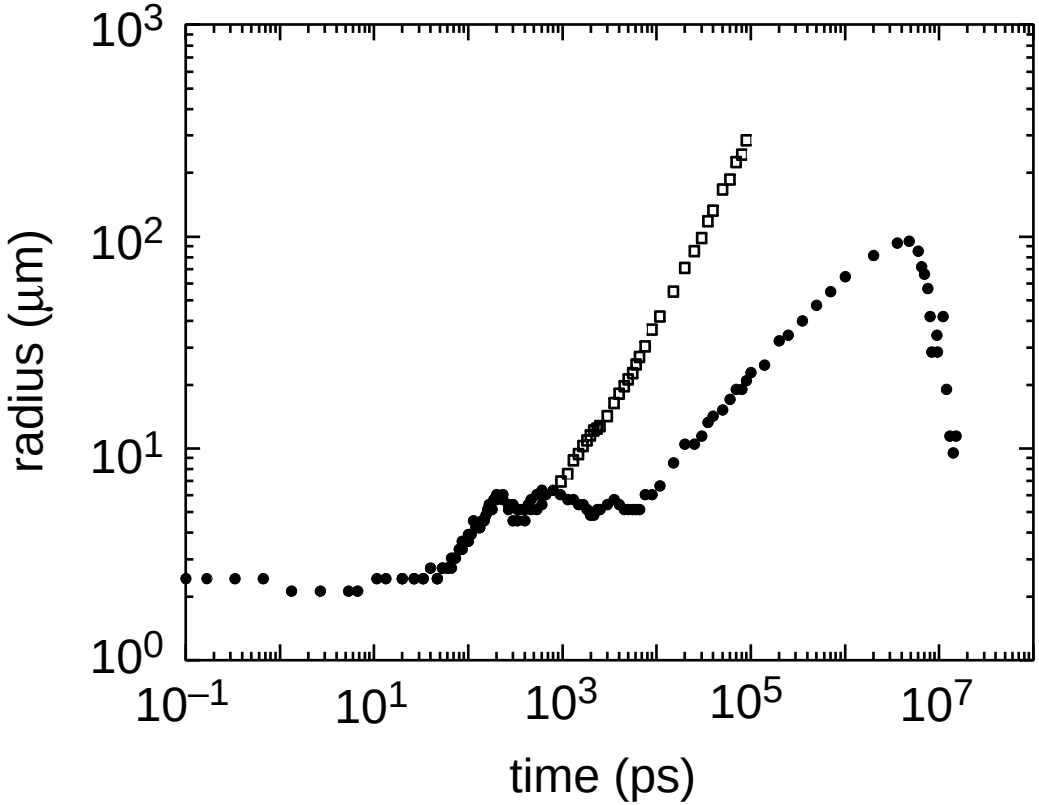

Dynamics of photodisruption

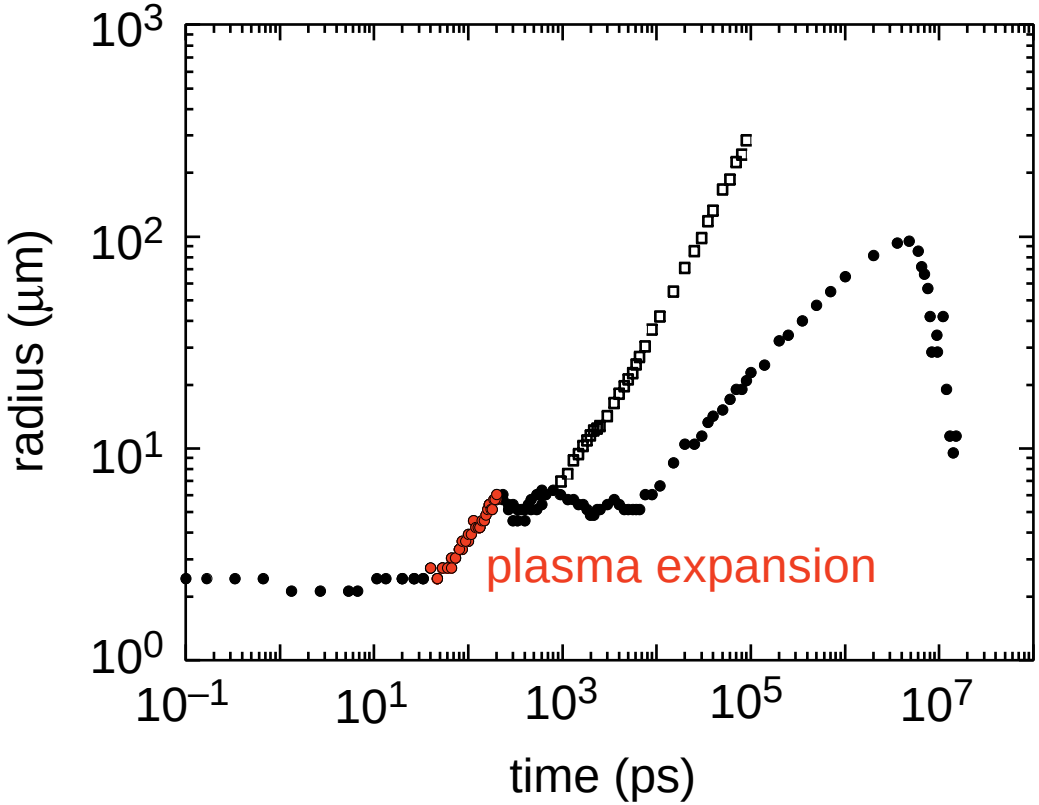

Dynamics of photodisruption

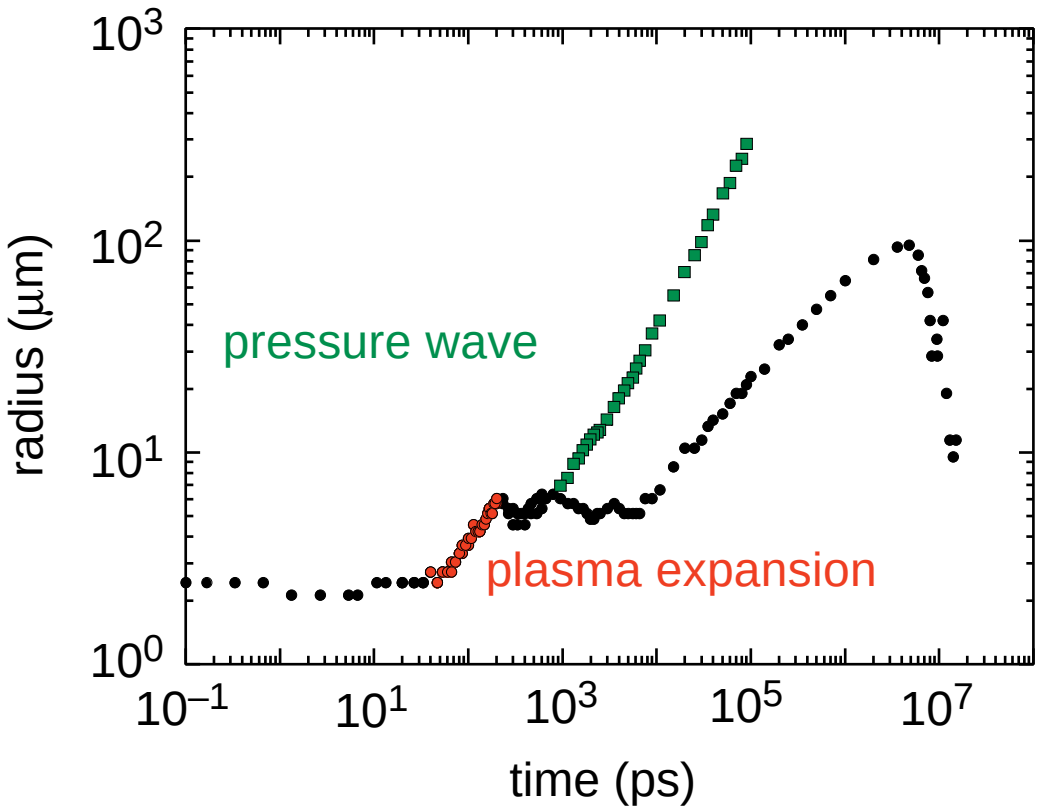

Dynamics of photodisruption

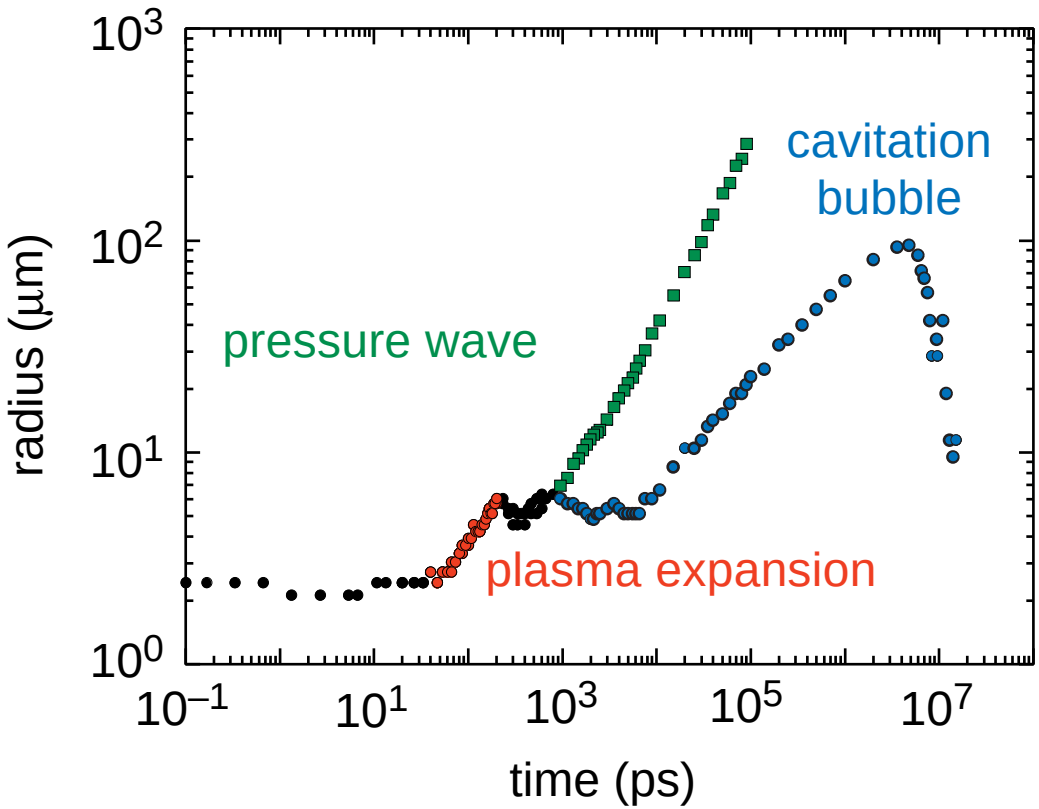

Photodisruption in epidermis

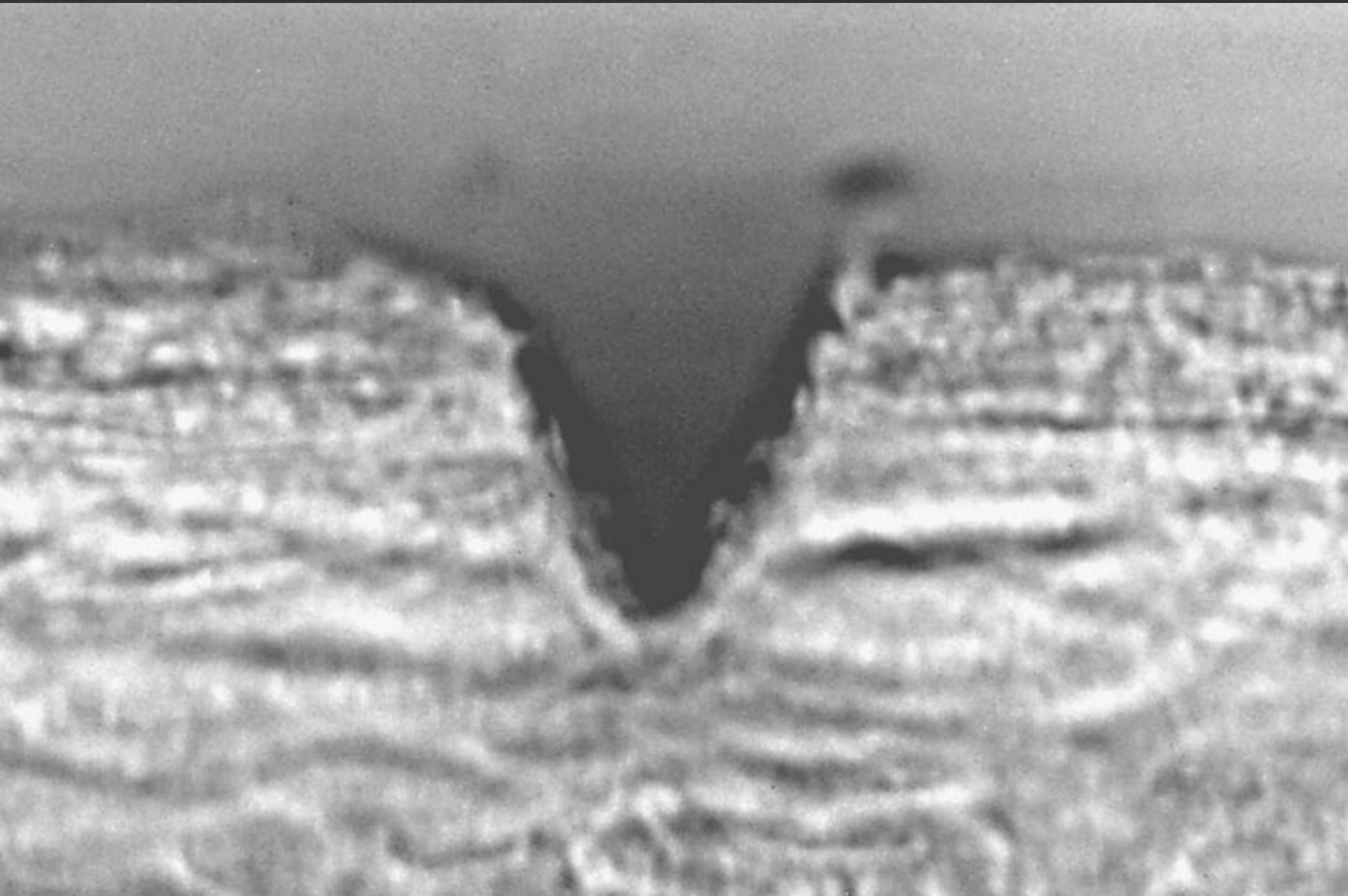

Photodisruption in epidermis

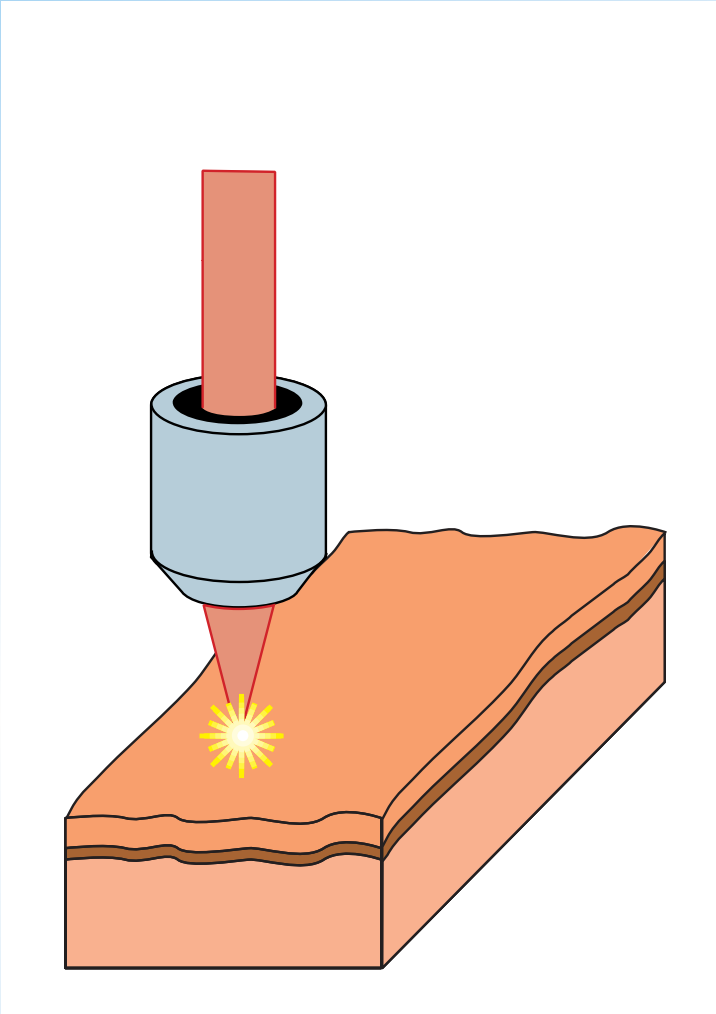

EpiDerm from MatTek Corp.

stratified skin model

Photodisruption in epidermis

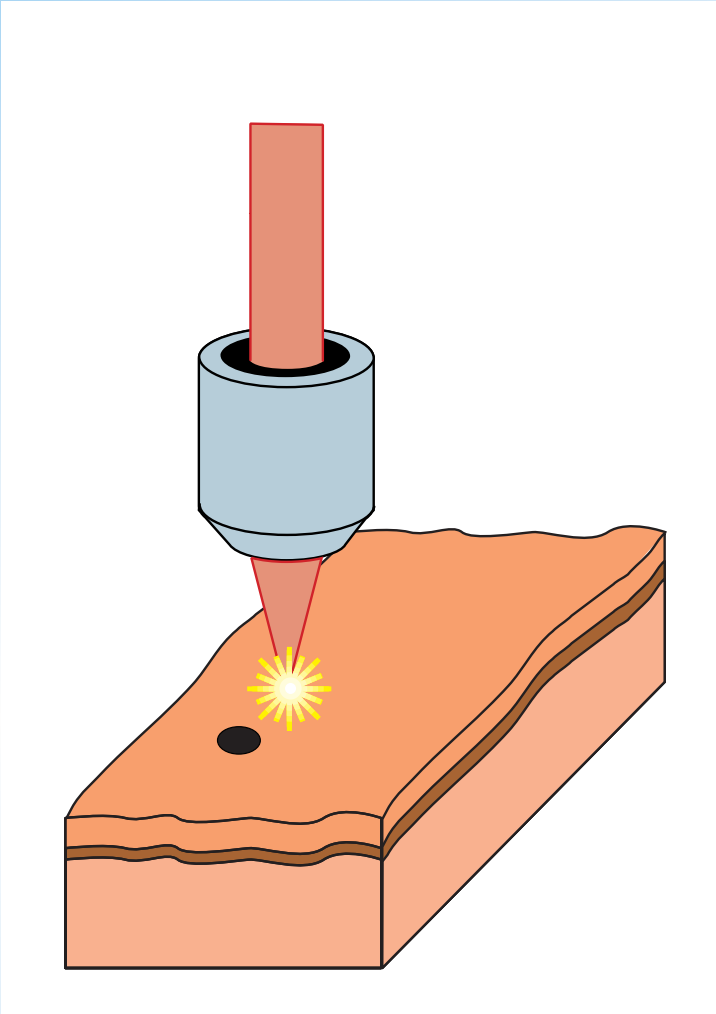

Photodisruption in epidermis

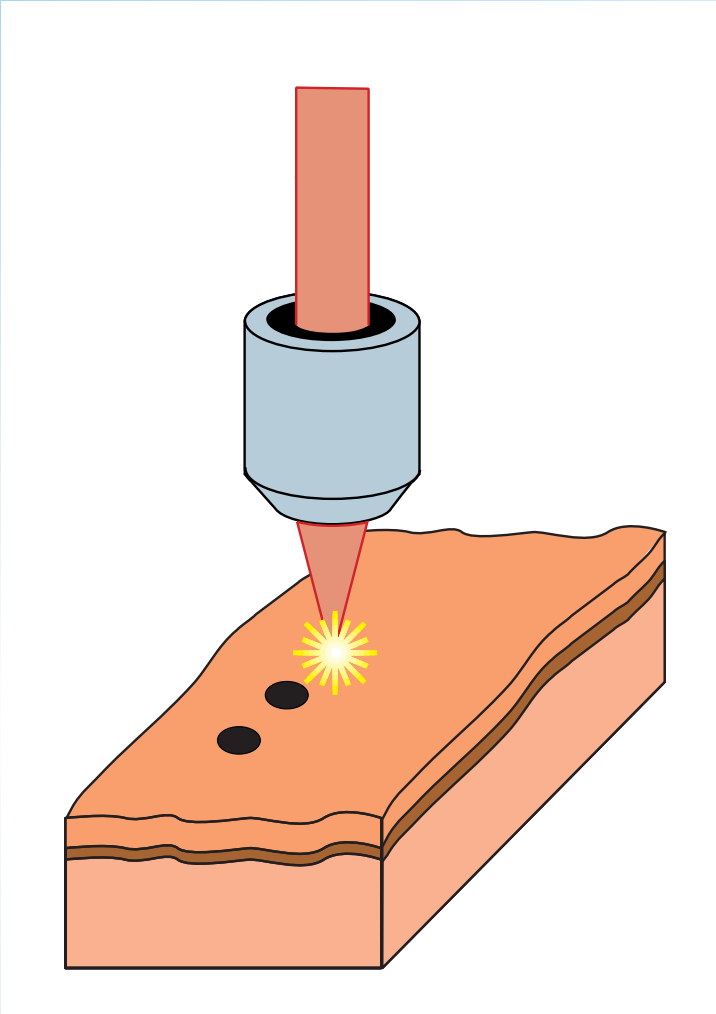

Photodisruption in epidermis

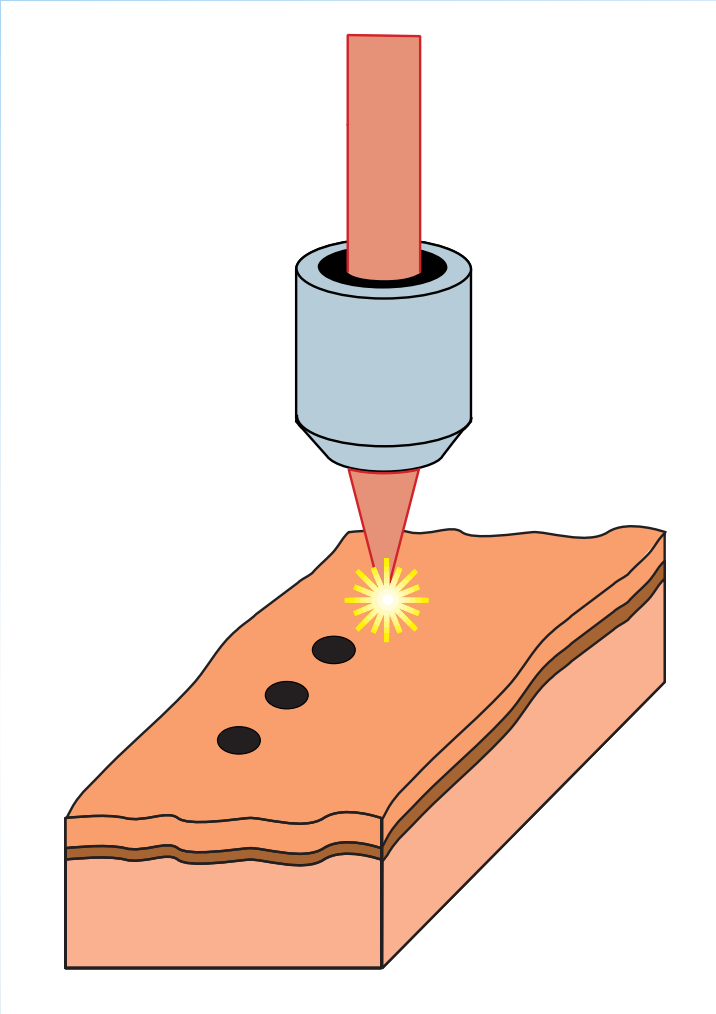

Photodisruption in epidermis

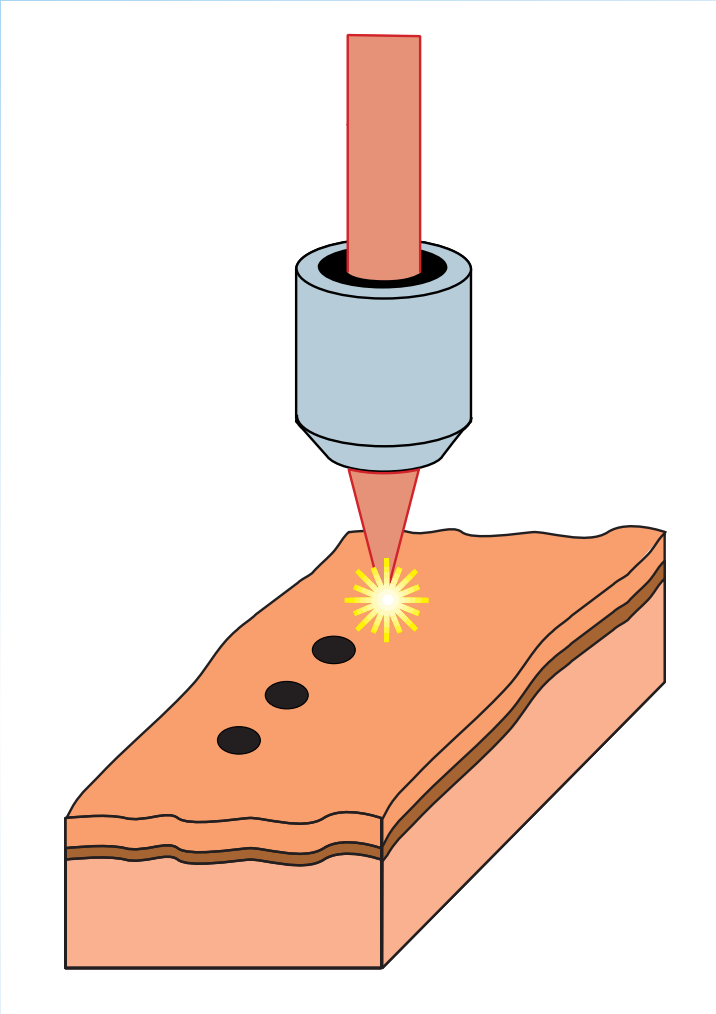

	damage threshold
100 fs	2 µJ
200 ps	5 µJ

Photodisruption in epidermis

200 ps, 40 µJ

100 fs, 40 µJ

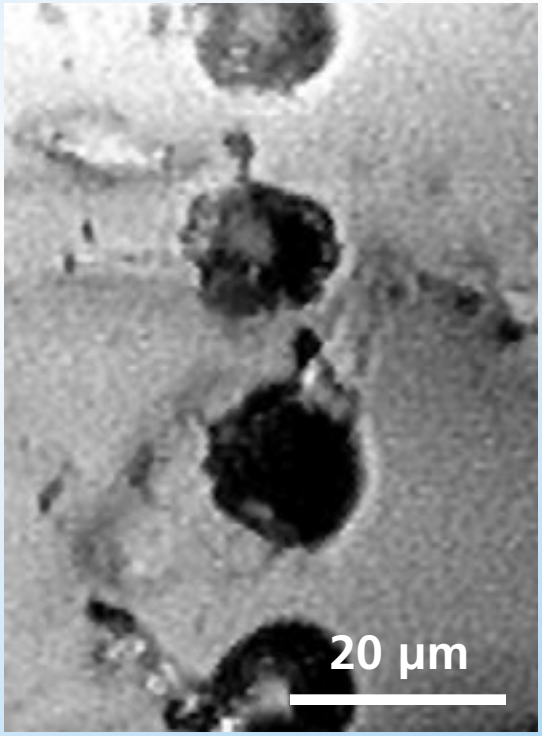

fs pulses reduce collateral damage

Photodisruption in epidermis

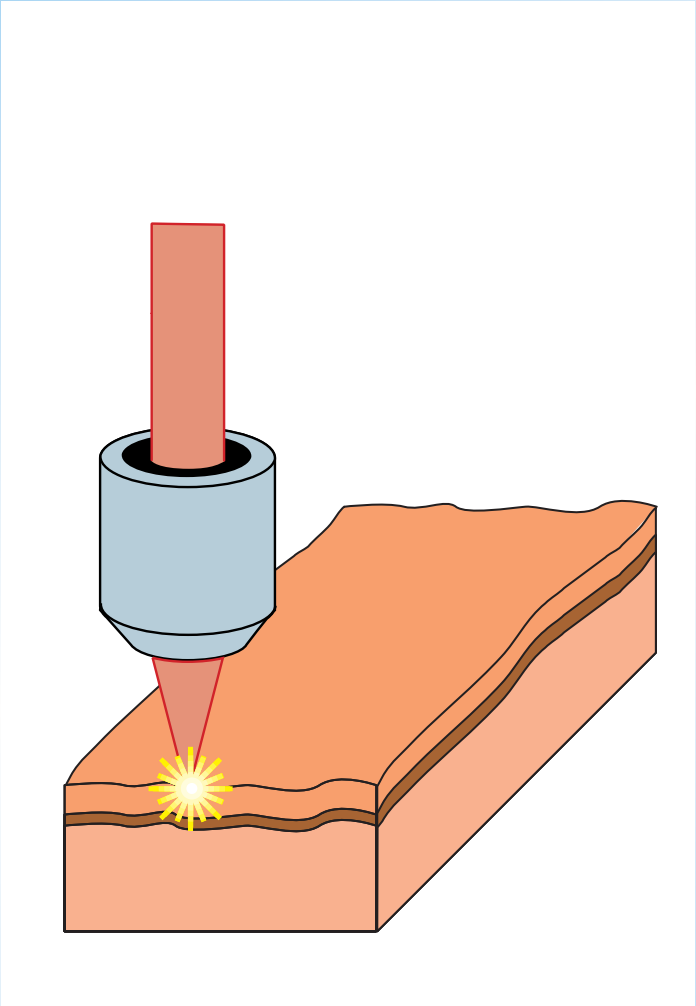

Photodisruption in epidermis

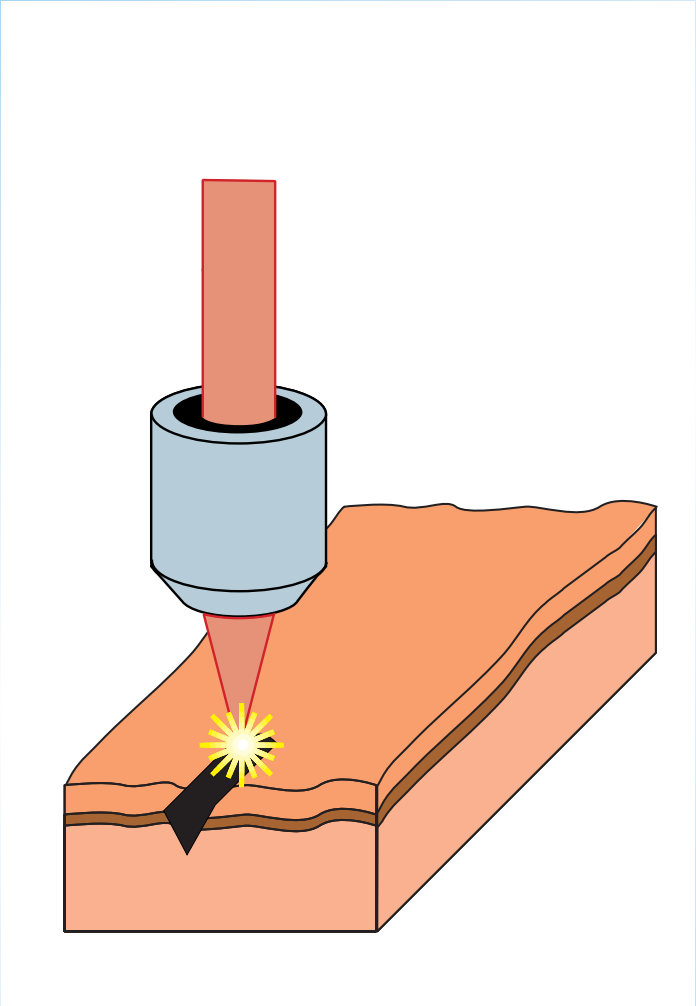

Photodisruption in epidermis

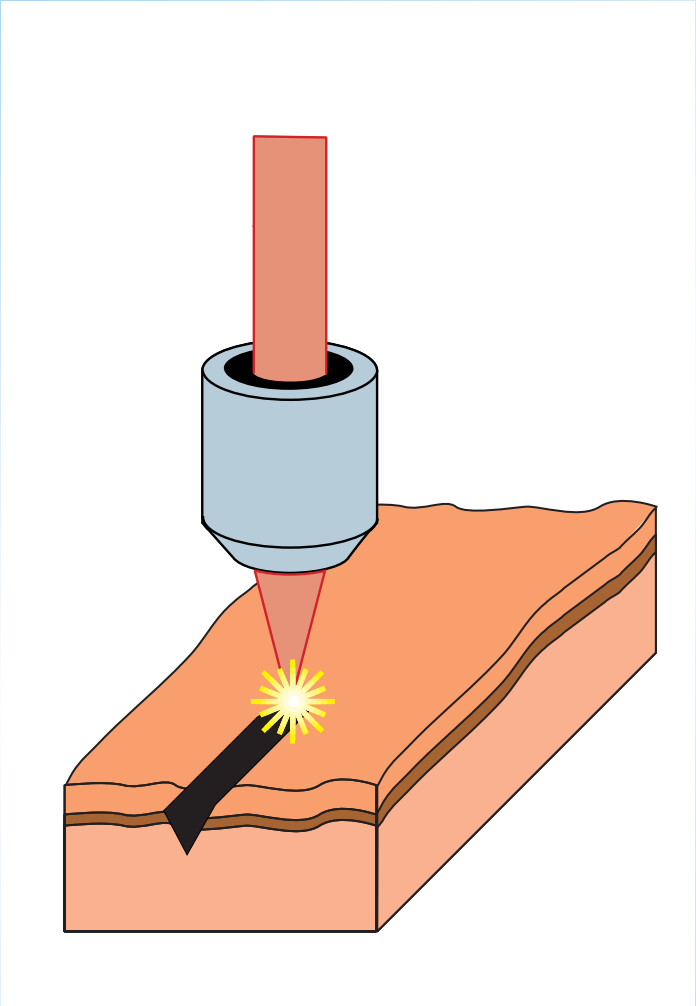

Photodisruption in epidermis

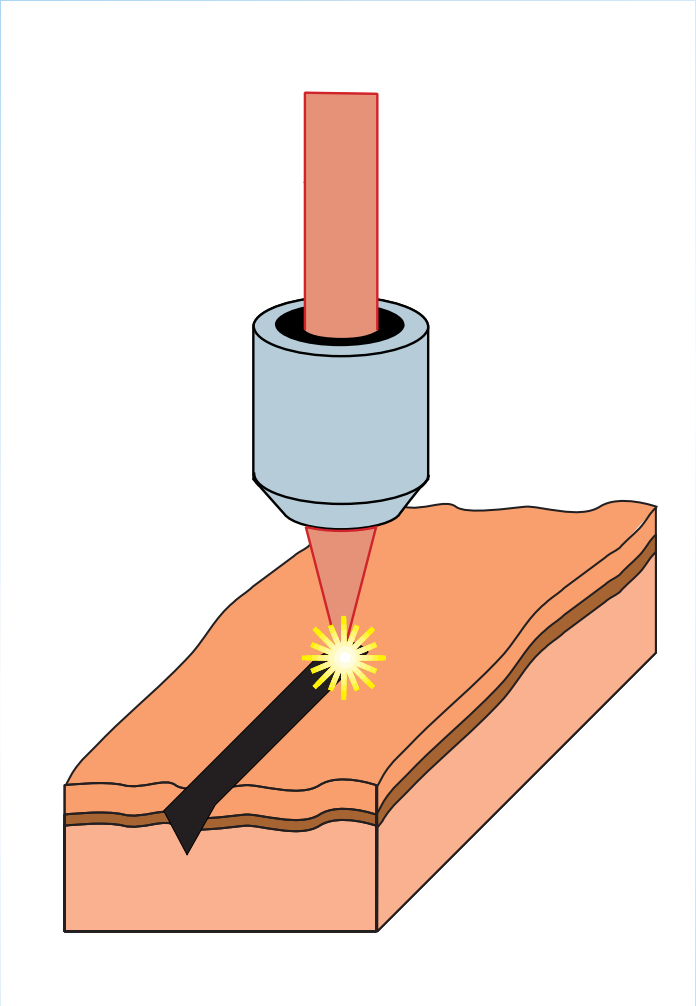

Photodisruption in epidermis

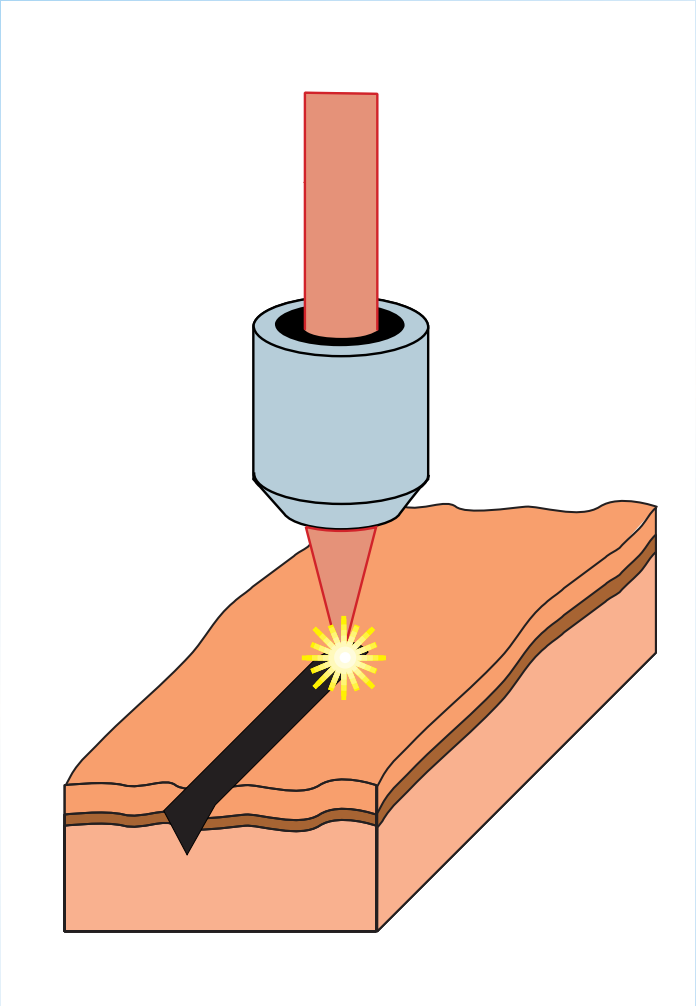

100 fs, 4 µJ

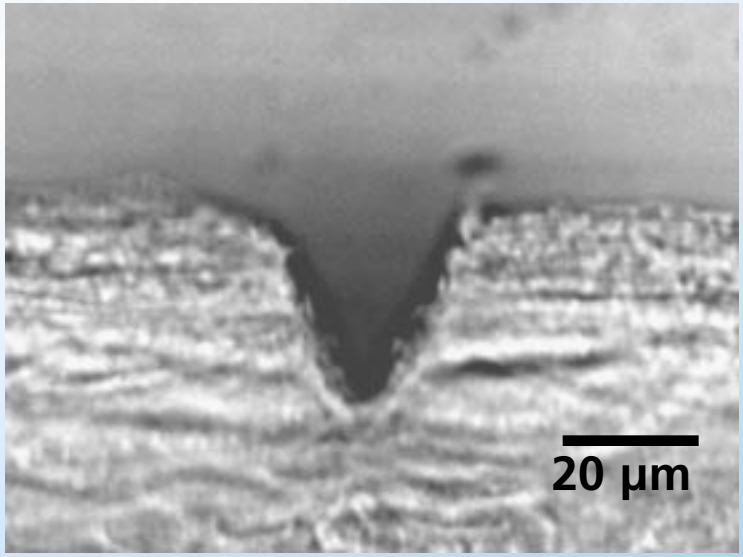

Photodisruption in epidermis

focus below surface…

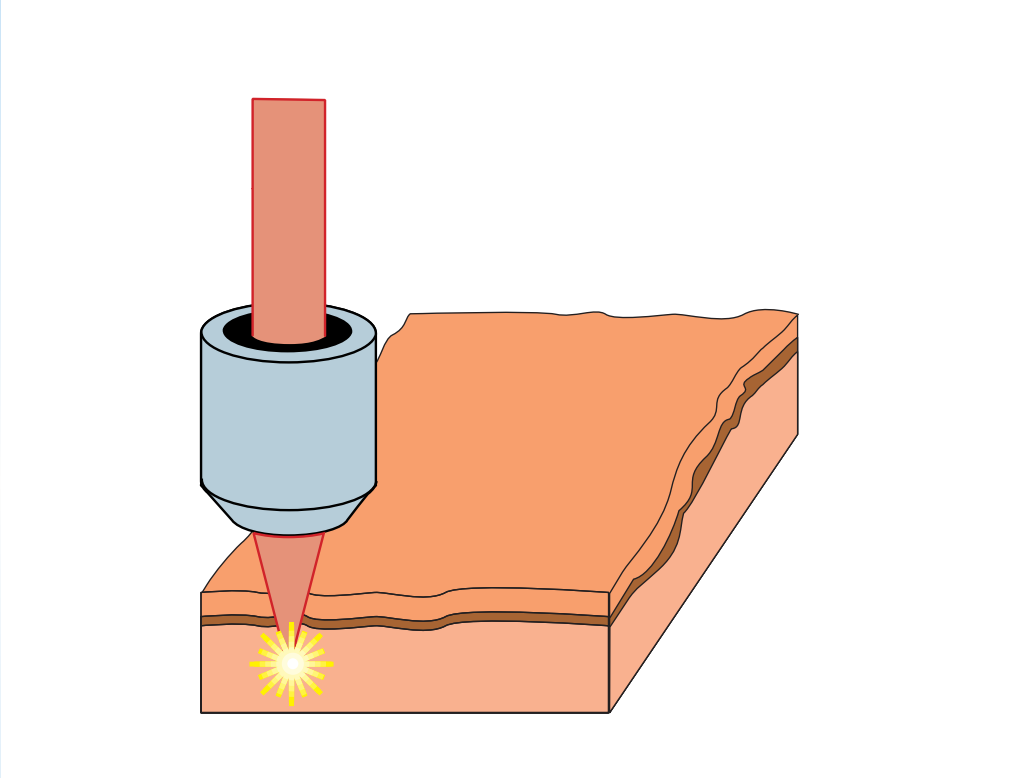

Photodisruption in epidermis

… and translate beam

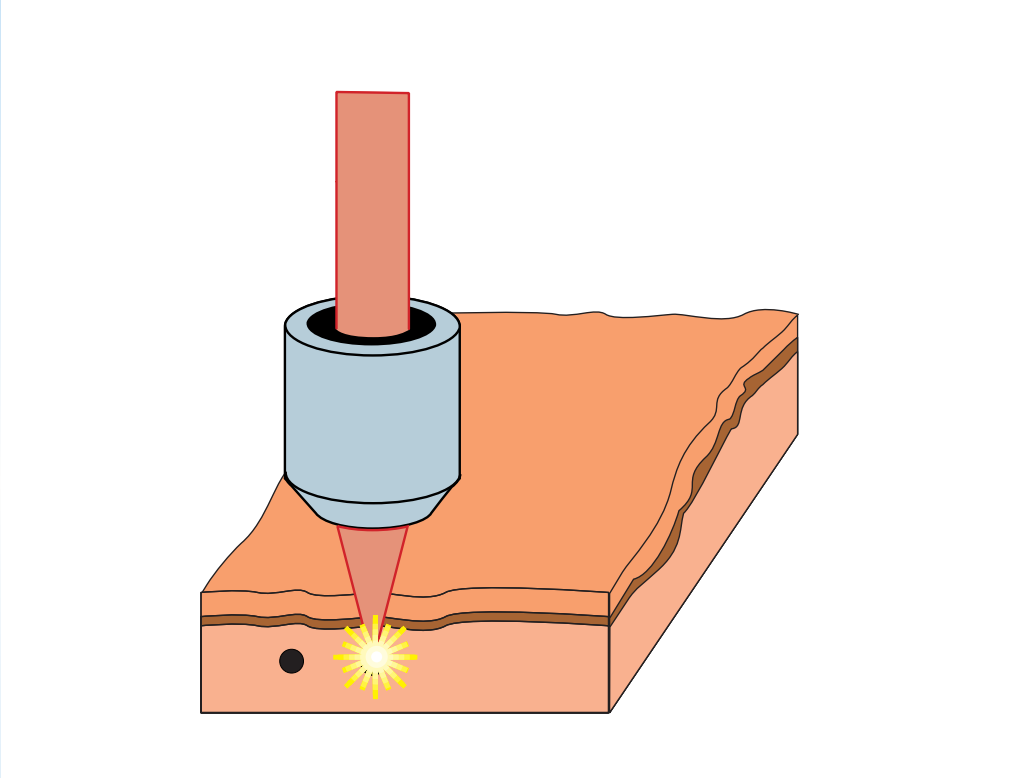

Photodisruption in epidermis

… and translate beam

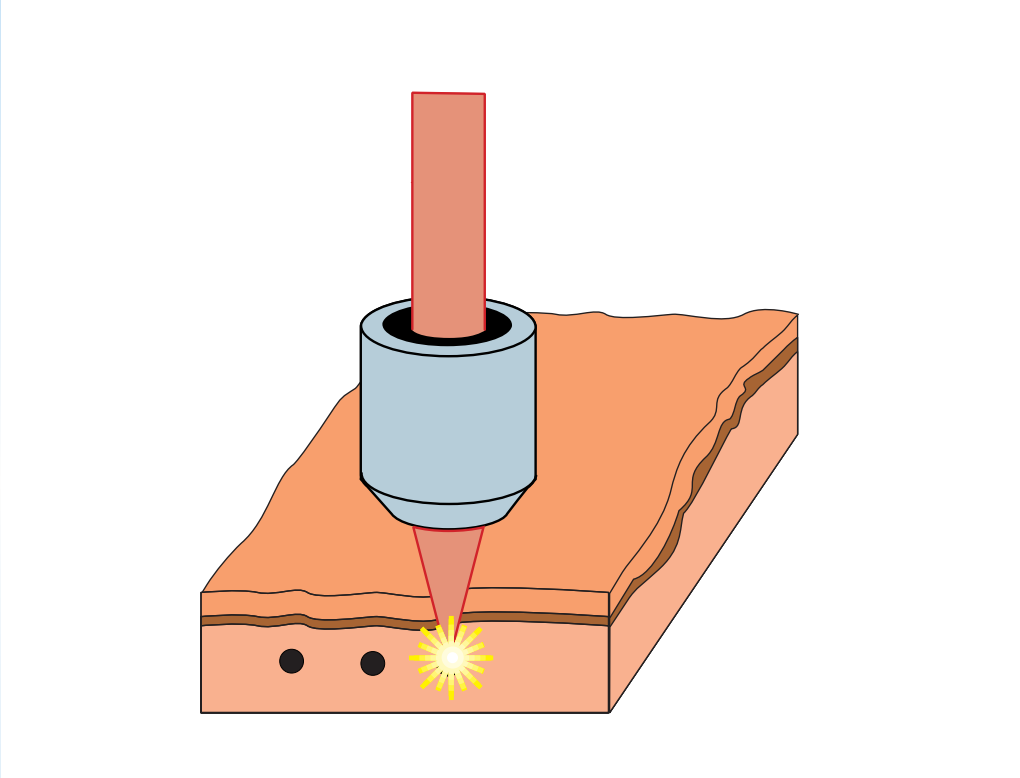

Photodisruption in epidermis

… and translate beam

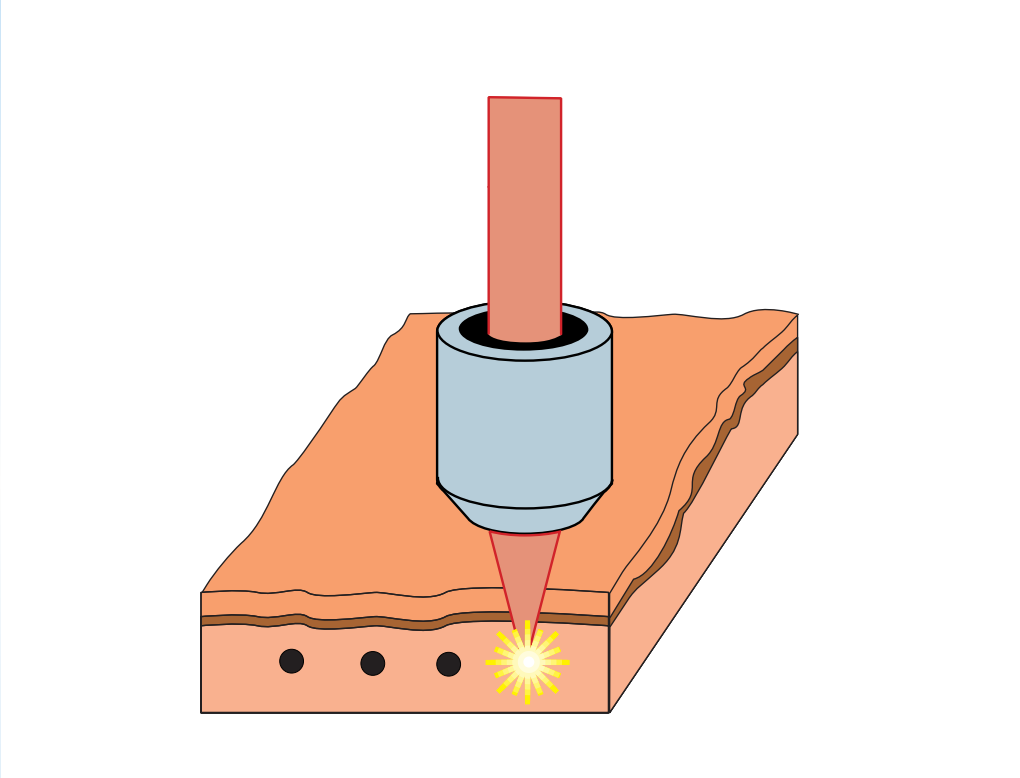

Photodisruption in epidermis

200 ps, 20 µJ

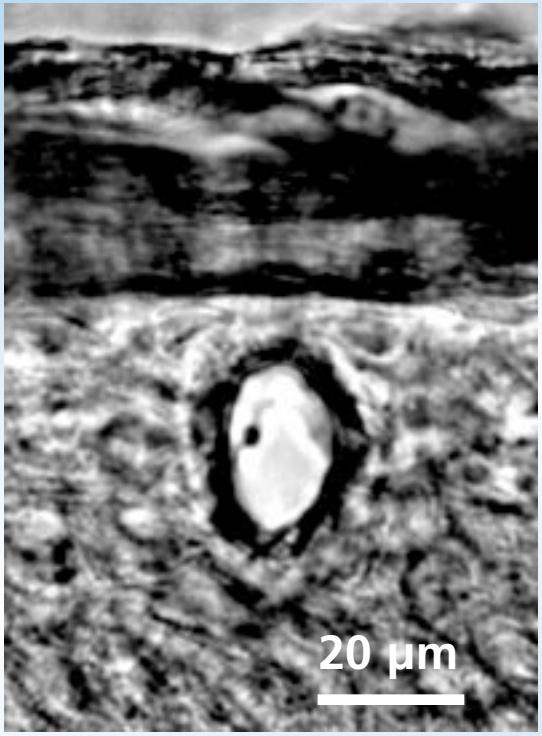

100 fs, 20 µJ

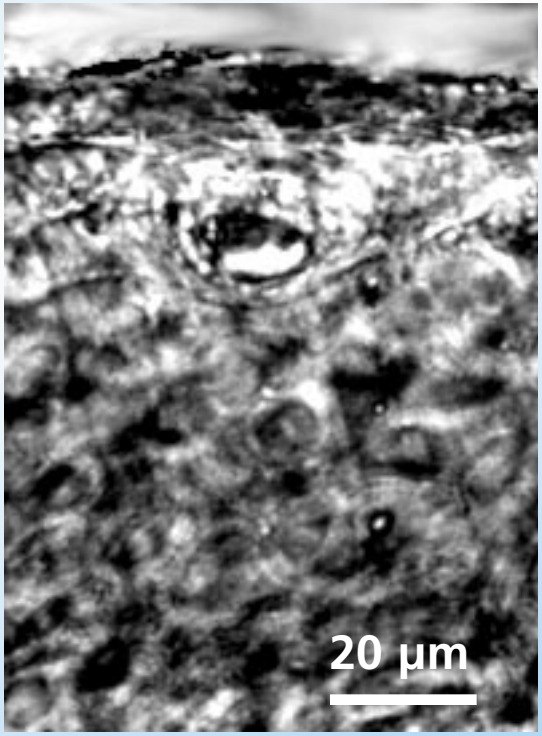

undamaged surface

Deep photodisruption

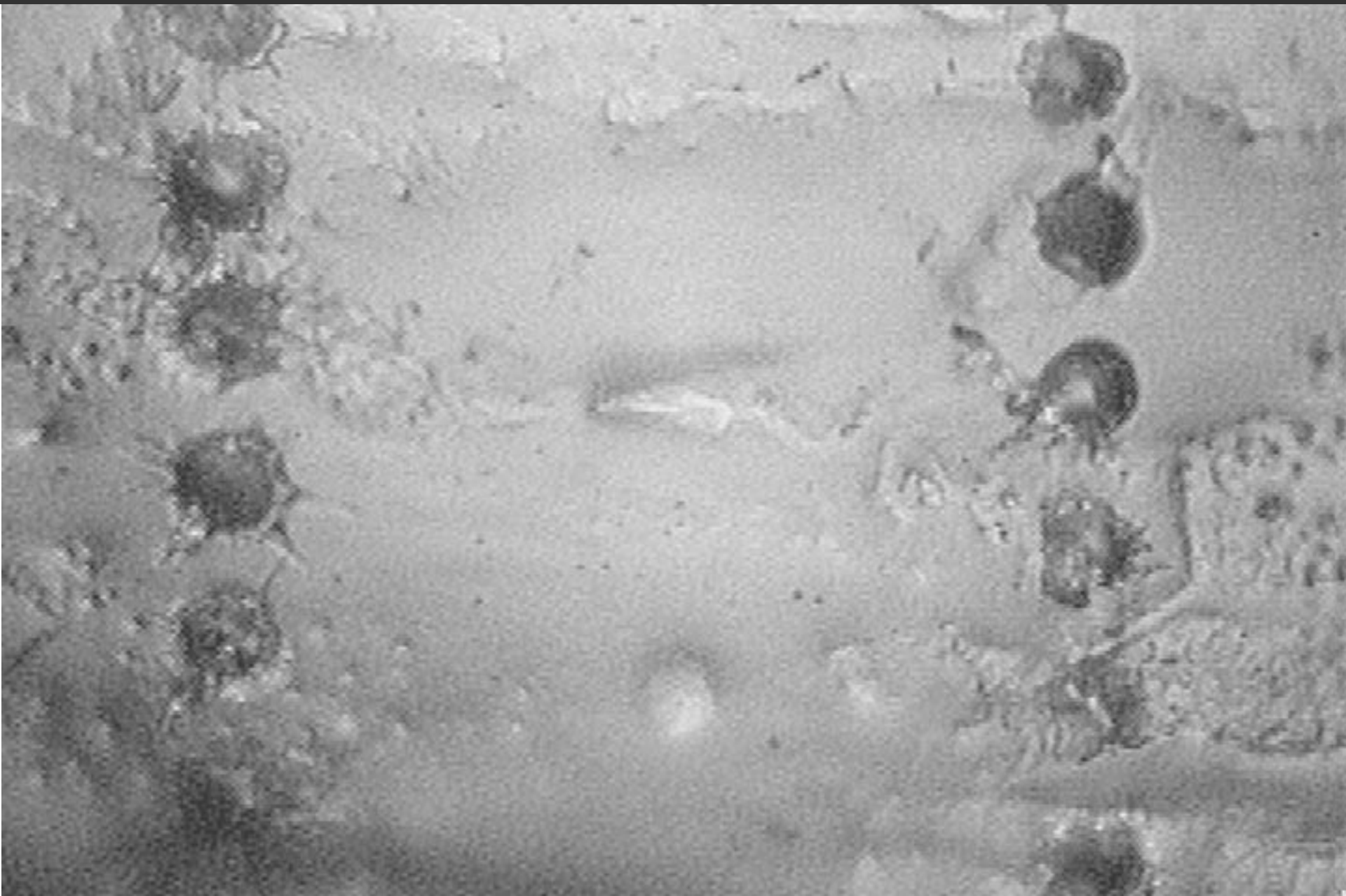

Photodisruption in epidermis

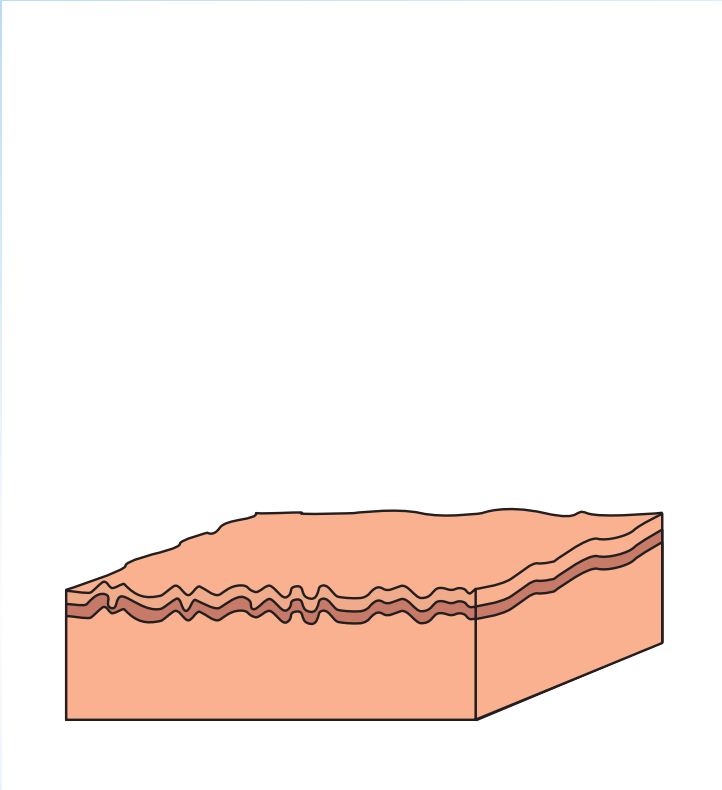

realistic model: pig skin

rough surface causes focusing aberrations

Photodisruption in epidermis

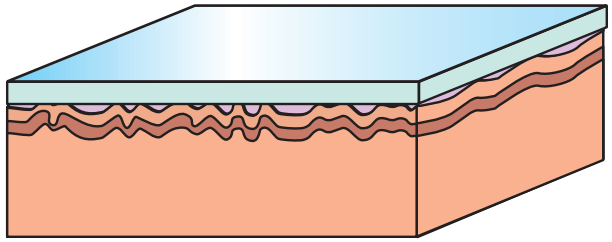

realistic model: pig skin

flatten with saline and cover slip

Photodisruption in epidermis

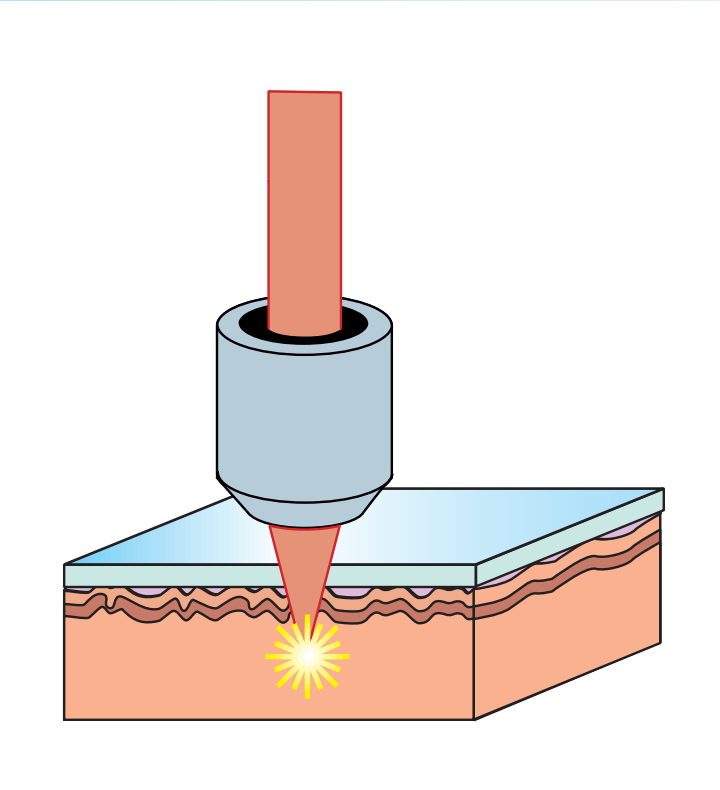

realistic model: pig skin

flatten with saline and cover slip

Photodisruption in epidermis

100 fs, 40 μJ

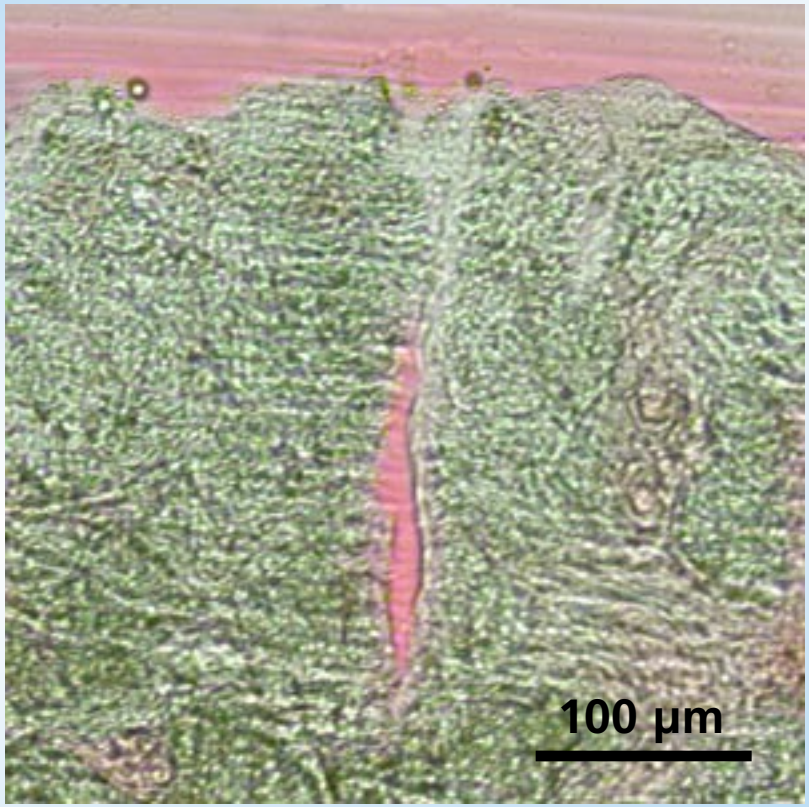

shape determined by self-focusing

Photodisruption in epidermis

100 fs, 40 μJ

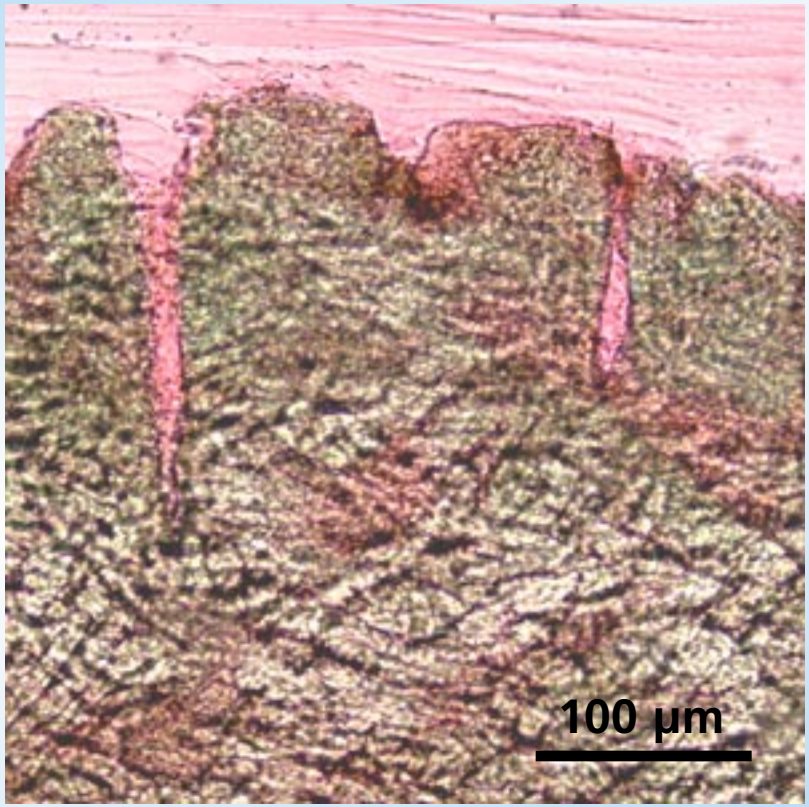

100 μm difference in focusing depth

Summary

- **100 fs pulses better than 200 ps pulses**
- **sub-surface cavity formation in tissue**
- **long channel formation in bulk pig skin**

Funding: National Science Foundation

Acknowledgments:
Jill McMahon

For a copy of this talk and additional information, see:

http://mazur-www.harvard.edu